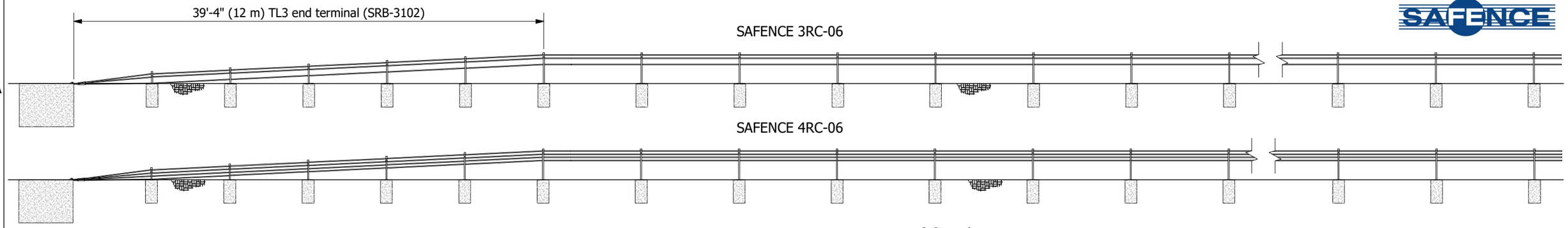

Concrete anchor (D-3017)

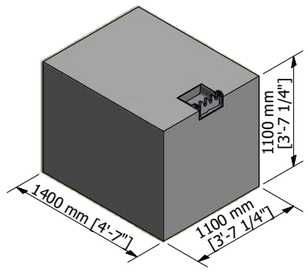

- End anchors can either be cast on site or prefabricated.
- Anchors are to be aligned with wire rope safety fence.
- Embedded wire fitting are to be placed at ground level, be placed horizontally at the side of the road and follow the slope of the road longitudinally.
- Backfilling around end anchors are to be done with gravel, which is vibrated.
- Anchors are to be well covered.

Anchor embedded part (D-3018A)

Wire fitting (D-3023A)

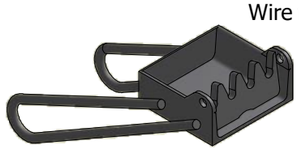

Check rope and Safety shackle (D-3028A)

Concrete footing

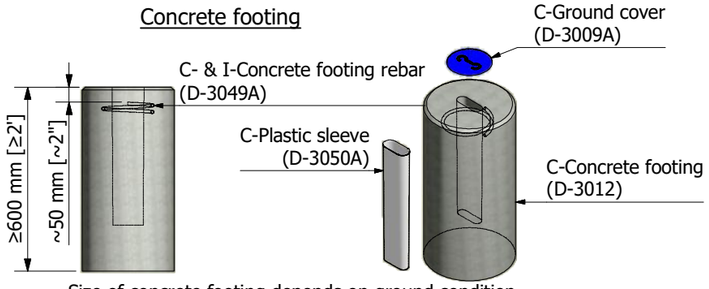

Size of concrete footing depends on ground condition.
Cast on site footings might impliy a need of C- & I-Concrete footing rebar (D-3049A) and C-Plastic sleeve (D-3050A).

Alternative post footing (passing bridges etc.)

Base plate anchored in road paving.
Base plate 800x800 (D-3006B/D-3013B) is milled down ≥ 60 mm in roadway surface and glued using epoxy.

Base plate anchored in the longitudinal concrete beam.
Embedded bolts plate (D-3014A) is casted into the concrete beam.
Base plate must not be in conductive contact with reinforcement bars.

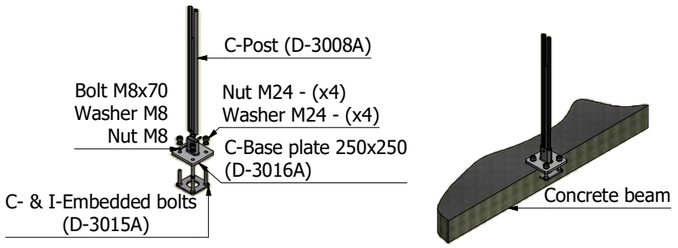

Rigging screw assembly

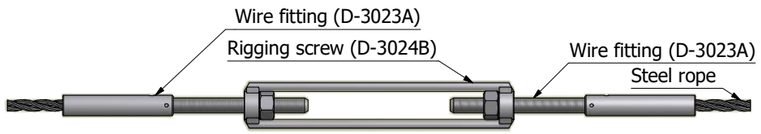

Rigging screws are to be mounted at every ~300 linear meters [~1 000'] and at ~150 linear meters [~500'] from anchorage point.

TL3 & TL4 elongation classifications		
Post distance	imperial	metric
1.5 m	43.3"	1.1 m
2.0 m	51.2"	1.3 m
2.5 m	59.1"	1.5 m
3.0 m	67.0"	1.7 m
3.5 m	74.8"	1.9 m
4.0 m	78.7"	2.0 m
5.0 m	90.6"	2.3 m
6.0 m	98.4"	2.5 m
7.0 m	106.3"	2.7 m
8.0 m	114.2"	2.9 m
9.0 m	122.0"	3.1 m
10.0 m	130.0"	3.3 m

SAFENCE 3RC-06 SAFENCE 4RC-06

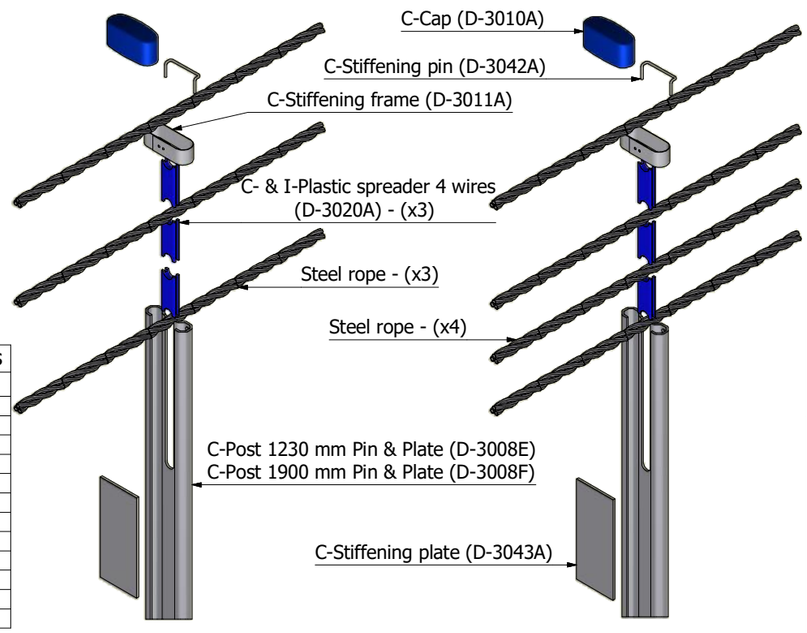

Tensioning table				
T [°C]	T [F]	[lbf]	[kN]	[bar]
-20	-4	5 750	25,5	290
-10	14	5 050	22,6	250
0	32	4 400	19,6	220
10	50	3 750	16,7	190
20	68	3 100	13,7	150
30	86	2 400	10,8	120
40	104	1 750	7,8	90

Lateral movement

Lateral movement to bypass obstacles (bridge piers etc.) are to be conducted gradually to prevent wire rope fence posts from being exposed to very high transverse forces.

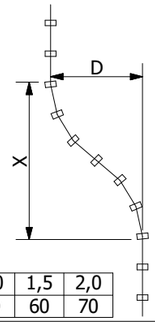

Lateral movement, D [m]:	0,5	1,0	1,5	2,0
Transition distance, X [m]:	40	50	60	70

Mounting in horizontal curves:
Mounting is not recommended in horizontal curves with a radius < 400 m.
If needed please contact Safence, Inc.

Mounting in vertical curves:
Mounting should not be executed in depressions with a radius < 1 200 m.

For any further enquiries regarding installation or working features of SAFENCE Wire Rope Safety Fence please contact Safence, Inc.

SAFENCE 3RC-06 **SAFENCE 4RC-06**

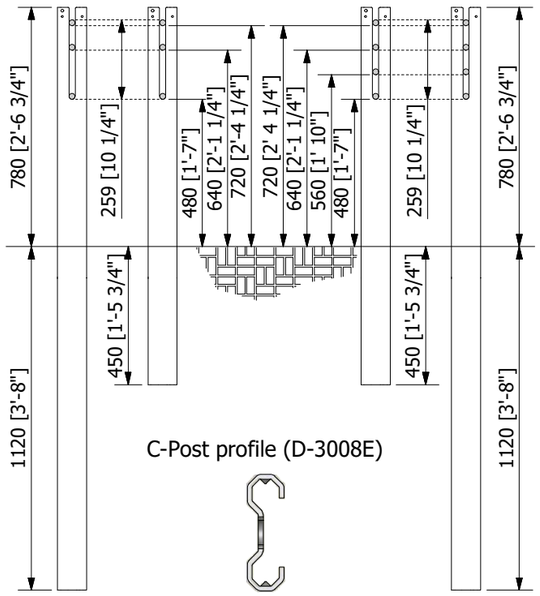

C-Post profile (D-3008E)

Drawn	Date	Acceptance standard	Units	Sheet size
RDS	2014-10-03	NCHRP 350	mm [ft-in]	A3

Safence, Inc.
1557 Ballard Way
Seattle, Washington 98107
USA

Name		
SAFENCE 3RC-06 & 4RC-06		
Drawing no.	Type	Rev
SRB-3006	Median and side 3 or 4 cable systems	A